SCHARF

SOLUTIONS FOR MINING TRANSPORT

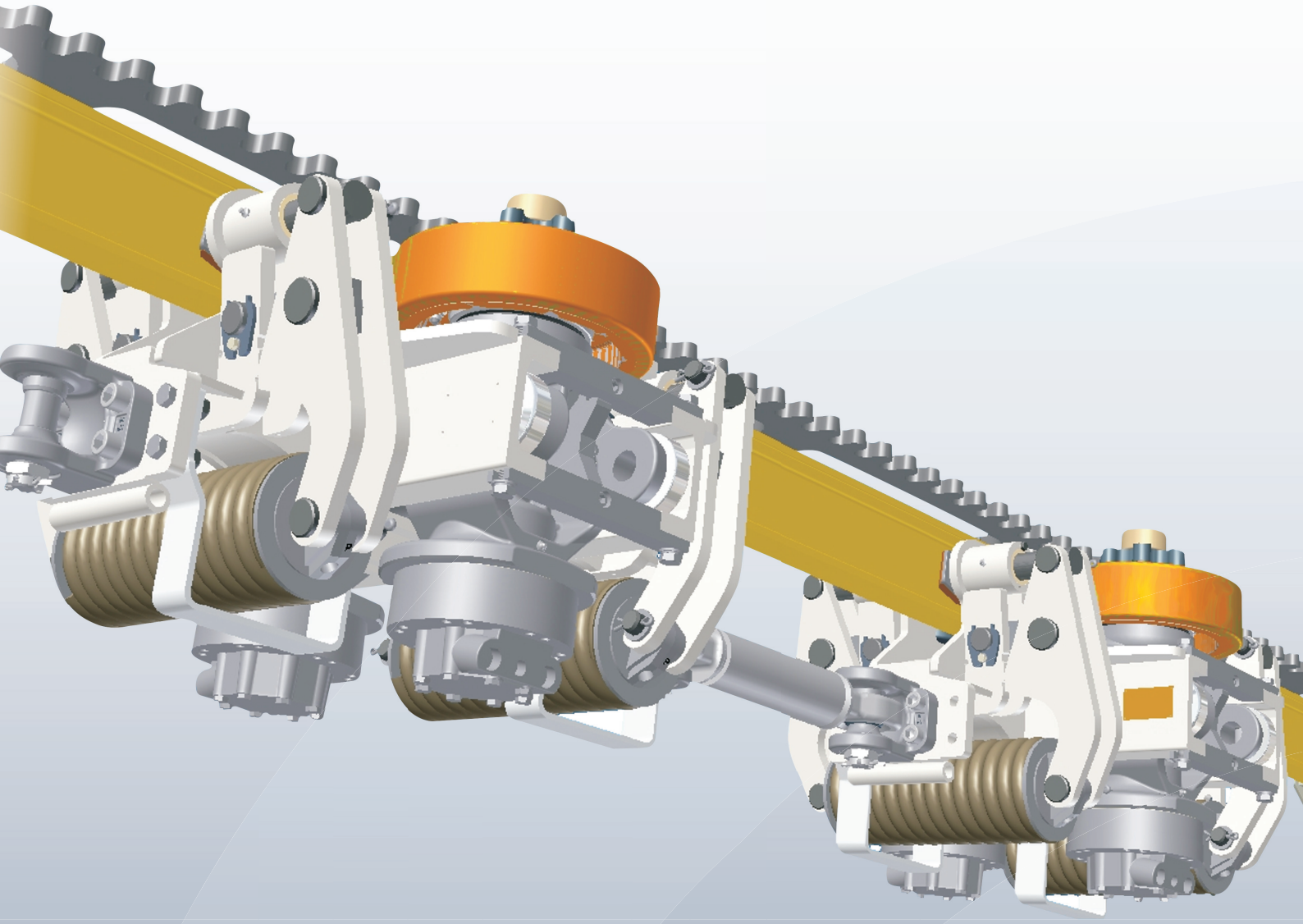

6-MONTH REPORT
01 JAN - 30 JUN 2013

Table of contents

Summary of key data

in TEUR	01.01.2013-30.06.2013 (core business)	01.01.2012-30.06.2012 (core business)	Change
Revenue	31,948	36,260	-11.9 %
Operating output	36,028	35,327	+2.0 %
Profit from operating activities (EBIT)	6,095	6,913	-11.8 %
EBIT margin	16.9 %	19.6 %	-
Profit/loss on discontinued operations	-1,963	242	-
Net income	3,008	5,897	-49.0 %
Order book as of June, 30	18,276	20,013	-8.7 %
Order intake	35,193	29,957	+17.5 %
Employees – end of period	303	245	+23.7 %

Introduction by the Managing Board

Dear shareholders,

We can now clearly feel the effects of the cooling of the mining sector – which we have been announcing since over a year ago – in our revenue and order book position. Reticence on the part of our mining customers is due, firstly, to lower commodity prices, especially in coal, and, secondly, to the further reduction of the growth target for China to only 7%. The country's hunger for raw materials has been the motor of the last decade's mining boom. Revenue of our core business (excluding Dosco), EUR 31.9 million in the first half of 2013 was 12 % below the comparable prior-year figure, and our order book position is down by -9 % to EUR 18.3 million. China, Russia and Poland were again the main markets for SMT Scharf products during the months January to June, with China taking the lead from Russia in our core business compared to last year. Exports accounted for 89.5 % overall (H1/2012: 88.9 %). Operating earnings (EBIT) reported a decline of 12 % to EUR 6.1 million, although operating output was up slightly.

In May 2013, we spun off our subsidiary Dosco Holdings Limited. The sales price amounted to EUR 2.0 million. At the same time, all SMT Scharf directors stepped down from their management positions at Dosco. Consequently, there will be no connection between SMT Scharf and Dosco in the future. The first reason for this disposal was our strategic aim of concentrating on our core business of rail transport systems. Secondly, the synergies that had been expected in service and sales could not be leveraged as intended when Dosco was purchased. The loss incurred on these discontinued operations amounted to EUR -2.0 million in the first six months of 2013 (H1/2012: EUR 242 thousand), feeding through to a 49 % reduction in consolidated net income to EUR 3.0 million.

Compared to our peer group, which has seen order intake declines of between 20 % and 30 %, SMT Scharf is benefiting from its strong service business (54 % of revenue), while the intake of new orders was up by 18 % during the first six months. Our low fixed cost base, with personnel cost comprising just 19 % of total operating output, also helps us to maintain

high profitability even with lower revenue. Moreover, this allows us to hire personnel at our subsidiaries in China, Russia and Poland, in order to enhance local engineering and assembly. In this way, we aim to boost our specialist expertise at our sites located close to our customers, and to reduce our personnel costs over the medium term.

With a view to the full 2013 year, we nevertheless no longer expect to achieve last year's revenue level. Instead, we believe that the economic environment for the mining industry will not brighten significantly before mid-2014 or the start of 2015. Therefore we continue to regard 2013 as a transitional year with flat demand. On a medium term perspective, though, demand for commodities can be expected to grow further in line with global economic output. Even if demand were to stay the same, an increasing number of machines will be required to tap deep-level coalfields that are becoming ever more difficult to reach. Our captivated transport systems will remain indispensable for this purpose.

We would like to thank you as investors, business partners and customers, for the trust that you have placed in our company to date. We look forward to continuing on our path together with you.

Yours sincerely

Christian Dreyer Heinrich Schulze-Buxloh

Management report

Macroeconomic environment

The business success of SMT Scharf Group depends to a great extent on investment activity trends in international mining, especially in hard coal mines. In turn, this reflects global demand for raw materials. Coal production has continued to grow in all of SMT Scharf Group's target markets in 2012, with the exception of Germany and Poland. Growth was mainly reported in Asian fields, especially in China, where almost half of total global coal production is mined. Moreover, the country is the largest producer of gold, and ranks as the world's third-largest for iron ore. Hard coal mining is being gradually phased out in Germany by 2018. Overall, international energy experts, such as the US Energy Information Administration, anticipate continuous annual growth in coal production of 1-2 % worldwide for the next ten years. Some estimates even assume such growth to continue beyond the next 30 years. This includes a strong shift away from industrial countries (EU, USA) towards expanding economies in Asia.

Especially established mining companies, however, are holding back with investments on a short-term basis, whereas emerging economies are continuing to invest strongly. Nevertheless, approximately USD 110 billion of mining investments in 2013 will be 21 % lower year-on-year, according to sector estimates produced by PricewaterhouseCoopers. In the medium term however, especially Chinese mines need to catch up with the past decades' investment backlog, and are investing in infrastructure, for example. Directors at major mining groups are also monitoring this, and are assuming that demand in China and emerging economies will continue over the medium term. Another important task in the mining sector is to boost productivity further. This has been neglected in some places over recent years due to the boom. It has meant not only that our mining customers' operating costs have risen faster than in other sectors, but that margins have fallen.

As a consequence, growth in international mining, rising productivity pressure and ever increasingly inaccessible raw materials sites mean that mining operators have an increasingly greater incentive to deploy SMT Scharf products. These were originally developed especially for the difficult conditions in already mature German hard coal mining, and deliver efficiency and productivity benefits.

The global economy has gathered a little momentum during the first quarter of 2013, especially thanks to more positive economic trends in emerging economies, according to the German Institute for the World Economy (DIW). Global trade is also set to rise markedly over the course of the year. The DIW's economic researchers expect global economic output to grow by 3.2 % in 2013, compared with 3.1 % in the previous year. In Poland, gross domestic product will register only slight growth (2012: 2.0 %), while 2.3 % growth is predicted for Russia (2012: 3.3 %), and 8.3 % in China (2012: 7.9 %). In its Five-Year Plan, the Chinese government is a little more reticent for 2013, forecasting 7 %. By 2018, the International Monetary Fund (IMF) is expecting China to report annual economic growth of 8.0 % to 8.5 %.

Business report

Weak global economic trends during the past six months also impacted demand for mining equipment, and consequently on sales of SMT Scharf products. For example, revenue in the core business was down from EUR 36.3 million to EUR 31.9 million. The revenue decline was sharpest in Australia and Asia excluding China (-81 %), followed by Russia (-26 %),

Germany (-16 %, whereby this decline was due to policy reasons), China (-10 %) and Africa (-6 %). By contrast, demand registered a marked increase in Poland (+25 %) and on other European markets (+72 %). In this context, Poland is the only sales market that reported revenue growth in both the new systems business and in the service business (+17 %). In America, business has almost come to a complete stop, since it was fed exclusively by demand for Dosco products.

Our export share in our core business remains very high at EUR 28.6 million, or 89.5 % (previous year: EUR 32.2 million, or 88.9 %). A look at the distribution by segment shows that most of the revenue of 93.8 % is attributable to the captivated transport systems segment, while chairlifts accounted for just 6.2 % of revenue.

This revenue decline is especially attributable to 29.4 % weaker new systems business, at EUR 14.8 million. Especially in Australia and Asia excluding China (-87 %), China (-42 %) and Russia (-39 %), demand fell considerably year-on-year. By contrast, revenue grew as the result of strong sales of systems in Africa (+11 %), Poland (+50 %) and – from a lower starting base – other European states (+367 %).

The fall in revenue in the new systems business was partly offset by 12.1 % higher income from our spare parts, repair and service business in an amount of EUR 17.1 million. Our service business reported a sharp rise especially on markets were our new systems business fell: in Russia (+73 %) and China (+63 %). By contrast, revenue from repairs, spare parts and service was down in America (-93 %), Australia and Asia excluding China (-44 %), Africa (-21 %) and other European countries (-20 %).

On June 30, 2013, the Group's order book position totalled EUR 18.3 million without taking Dosco into account, representing a 9 % decline compared with June 30, 2012 (EUR 20.0 million, without Dosco). By contrast, SMT Scharf AG grew its new order intake year-on-year. New orders of EUR 35 million were entered in the order book during the first six months of 2013 accordingly.

Research and development

As several design engineers will be entering retirement in the coming years, we have added several junior engineers to our construction and development team in Hamm since the start of the year in order to ensure know-how transition.

The construction and development department, as well as production, now report directly to the management in order to force a stronger connection between development and manufacturing. We expect synergy effects from this, especially where customers require further shortening of delivery times.

Staff have also been added to the local construction and development departments at our subsidiaries in Poland, Russia and China in order to more efficiently process developments that are close to our customers as part of our localisation strategy.

The transportation technologies that have been newly developed for ore mining have largely been shipped during the period under review, and will be installed in the mines for testing over the next six months.

Personnel

SMT Scharf Group employed a total of 303 staff as of June 30, 2013, of which 11 are trainees. Without the employees in the divested English subsidiaries, the Group employed

245 individuals in the previous year (including 12 trainees). SMT Scharf also employs temporary staff in order to flexibly boost production capacity. The number of employees at foreign locations rose from 123 to 172. The higher number of personnel outside Germany reflects the growing significance of foreign markets. Especially in China, Poland and Russia, we have boosted our staff numbers in line with our localisation strategy. We notably increased the number of employees in Russia since we have newly implemented operator models for our underground clients there.

Net assets, financial position and results of operations

The total consolidated assets of SMT Scharf Group amounted to EUR 66.5 million as of the June 30, 2013 balance sheet date. Due to the deconsolidation of Dosco which has taken place in the period under review it is not possible to compare the current balance sheet with the balance sheet as of December 31, 2012. With the deconsolidation of Dosco the assets decreased by EUR 14 million whereas the equity and liabilities decreased by EUR 11 million. The equity ratio amounted to 61.5 %, compared with 55.7 % as of December 31, 2012. In terms of non-current assets, the primary increases included property, plant and equipment (EUR +578 thousand) and the value of interests held in a joint-venture company in China. In terms of current assets, particular increases occurred in the case of inventories and other current receivable/assets, while trade receivables and liquid assets were down.

Revenue in the core business declined from EUR 36.3 million to EUR 31.9 million due to low demand. The change in inventories of EUR 4.1 million was significantly above the figure in the comparable prior-year period (EUR -933 thousand) due to orders where processing has been completed, but delivery has not yet occurred. In sum, the Group generated a slight increase in total operating output to EUR 36.0 million (H1/2012: EUR 35.3 million). Other operating income of EUR 861 thousand (H1/2012: EUR 878 thousand) primarily comprises work performed by the enterprise and capitalised of EUR 320 thousand, compared with EUR 201 thousand in the previous year. While the cost of materials fell despite the higher total operating output (cost of materials ratio 48.5 %, down 1.6 percentage points year-on-year), personnel expenses reported a marked increase due to hiring on foreign markets. The ratio rose from 16.5 % to 19.3 %. Depreciation and amortisation of EUR 623 thousand was down 35.6 %. The balance of other expenses and income (excluding depreciation and amortisation) rose to 13.5 % of the operating output, compared with 11.1 % in the previous year. In total, the SMT Shaft Group consequently generated EUR 6.1 million of operating earnings in the first half of 2013 (H1/2012: EUR 6.9 million), representing a 16.9 % EBIT margin (H1/2012: 19.6 %).

Due to the repayment of the mezzanine financing, and given a comparatively high interest-rate level, interest expenses fell, feeding through to an improvement in the net financial result from EUR 429 thousand to EUR 486 thousand. Income from participating interests was down by EUR 64 thousand to EUR 601 thousand, mainly as a result of the lower result from the Chinese joint-venture company. In the prior-year period, this item still included income from the interest in the subsidiary in the Ukraine, which has been fully consolidated since January 2013. This resulted in earnings before tax of EUR 6.6 million, compared with EUR 7.3 million in the prior-year reporting period. After deducting EUR 1.6 million of corporation taxes on income (H1/2012: EUR 1.7 million) and the EUR -2.0 million extraordinary charge from the discontinued operations (H1/2012: EUR 242 thousand), SMT Scharf AG generated EUR 3.0 million of consolidated net income in its core business. Compared with EUR 5.9 million in the first half of 2012, this is equivalent to a 49.0 % decline. Earnings per share declined to EUR 0.72, compared with EUR 1.42 one year previously.

Liquid assets amounted to EUR 11.6 million on June 30, 2013, compared with EUR 13.2 million at the end of 2012 (adjusted for Dosco).

SMT Scharf realised EUR 1,405 thousand of capital investments in the period under review. Of this amount, TEUR 320 million was attributable to current development projects that require capitalisation pursuant to IAS 38.

Risk Report

The opportunities and risks associated with the future development of SMT Scharf Group are discussed in detail in the Group management report for the fiscal year 2012.

Report on events after the balance sheet date

Following the end of the first half of 2013, no further events occurred which have a significant effect on the net assets, results of operations or financial position.

Outlook

We expect that the economic environment for the mining industry will not brighten again significantly until mid-2014 or the start of 2015. For this reason, we continue to regard 2013 as a transition year, and are no longer assuming that we will reach the previous year's revenue level.

The Managing Board nevertheless remains convinced that it will be able to raise Group revenue and earnings on average over the coming years, given that demand for raw materials will continue to grow further in line with global gross domestic product in the medium term. Our new localisation strategy forms a further basis for successful business growth in the medium term. As a decisive aspect, it includes boosting competences at our subsidiaries in close vicinity to our mining customers. Accordingly, we plan to issue from Germany central technologies and quality benchmarks for all functions – spanning development, production and all the way through to finance. In the sales market, full operating locations are to be developed from today's sales and service branches, which will be responsible not only for sales and service but also for customer-specific adaptation developments including local production and registration. In view of these factors, we regard ourselves as well positioned for the future.

Hamm, August 14, 2013

SMT Scharf AG

The Managing Board

IFRS semi-annual financial statements (unaudited)

Consolidated balance sheet

(in TEUR)	Notes	30.06.2013 (core business)	30.06.2012 (with Dosco)	31.12.2012 (with Dosco)
Assets				
Inventories		23,741	26,293	17,970
Trade receivables		14,712	23,329	24,003
Other current receivables/assets		3,287	3,153	1,551
Cash and cash equivalents		11,581	10,677	16,515
Current assets	(4)	**53,321**	**63,452**	**60,039**
Intangible assets		2,748	3,381	3,306
Property, plant and equipment		6,243	8,587	8,355
Participating interests		2,367	1,994	1,939
Deferred tax assets		1,814	2,733	4,097
Other non-current receivables / assets		2	157	62
Non-current assets	(5)	**13,174**	**16,852**	**17,759**
Total equity and liabilities		**66,495**	**80,304**	**77,798**
Equity and liabilities				
Current income tax		150	2,076	802
Other current provisions		5,379	6,347	4,984
Advance payments received		1,646	4,587	1,281
Trade payables		3,118	9,505	6,012
Current financial liabilities		7,000	0	4,989
Other current liabilities		621	890	1,433
Current provisions and liabilities	(6)	**17,914**	**23,405**	**19,501**
Provisions for pensions		2,710	4,664	11,185
Other non-current provisions		2,388	2,399	2,186
Deferred tax liabilities		1,091	1,335	1,055
Non-current financial liabilities		1,513	4,972	538
Non-current provisions and liabilities	(6)	**7,702**	**13,370**	**14,964**
Subscribed capital		4,155	4,153	4,153
Share premium		11,815	11,763	11,763
Profit brought forward		25,897	26,782	26,965
Currency translation difference		-988	831	452
Equity	(7)	**40,879**	**43,529**	**43,333**
Total equity and liabilities		**66,495**	**80,304**	**77,798**

Consolidated statement of comprehensive income

(in TEUR)	Notes	01.04.2013-30.06.2013	01.04.2012-30.06.2012	01.01.2013-30.06.2013	01.01.2012-30.06.2012
Revenue	(1)	16,843	19,341	31,948	36,260
Changes in inventories		1,338	-1,308	4,080	-933
Operating output (100 %)		18,181	18,033	36,028	35,327
Other operating income		128	381	861	878
Cost of materials		8,071	8,092	17,484	17,692
Personnel expenses		3,560	2,890	6,959	5,817
Depreciation and amortisation		237	259	623	968
Other operating expenses		3,546	2,431	5,728	4,815
Profit from operating activities (EBIT)		**2,895**	**4,742**	**6,095**	**6,913**
Income from participating interests		404	468	601	665
Interest income		24	25	71	52
Interest expenses		56	136	186	288
Financial result		**372**	**357**	**486**	**429**
Profit from ordinary activities		**3,267**	**5,099**	**6,581**	**7,342**
Income taxes	(2)	938	1,222	1,610	1,687
Profit from discontinued operations		**-1,433**	**-387**	**-1,963**	**242**
Net income		**896**	**3,490**	**3,008**	**5,897**
Currency differences from translation of foreign financial statements		-714	81	-1,440	621
Comprehensive income		**182**	**3,571**	**1,568**	**6,518**

Earnings per share (in EUR)				
Basic	0.22	0.84	0.72	1.42
Diluted	0.22	0.84	0.72	1.42
Average number of shares	4,154,850	4,152,655	4,153,829	4,151,090

Consolidated cash flow statement

(in TEUR)	01.01.2013-30.06.2013	01.01.2012-30.06.2012
Net income	3,008	5,897
Deconsolidation loss	778	0
Income from equity participation	-600	-655
Depreciation and amortisation	735	1,107
Gain / loss from disposals of non-current assets	66	21
Changes in assets, provisions and liabilities		
- Provisions	1,099	448
- Taxes	-886	-1,111
- Inventories	-9,314	-1,670
- Receivables / other assets	6,436	-332
- Liabilities	-1,312	-3,717
Net cash flows from / used in operating activities	**10**	**-22**
Investments in non-current assets	-1,405	-732
Payments from acquisitions	-40	0
Payment received from sale of Dosco	1,500	0
Acquired/realised cash and cash equivalents	-3,023	0
Net cash flows used in investing activities	**-2,968**	**-732**
Sale of treasury shares	54	77
Dividend disbursement	-4,076	-3,945
Repayment of / proceeds from financial liabilities	2,986	18
Net cash flows from / used in financing activities	**-1,036**	**-3,850**
Effect of changes in exchange rates and group composition	-940	509
Change in net financial position*	**-4,934**	**-4,095**
Net financial position – start of period	15,834	14,091
Net financial position – end of period	10,900	9,996

* Cash and cash equivalents and securities without hardship and social funds less current financial liabilities

Consolidated statement of changes in equity

(in TEUR)	Subscribed capital	Share premium	Profit brought foward	Currency translation differences	Equity
Balance at January 1, 2013	**4,153**	**11,763**	**26,965**	**452**	**43,333**
Dividend disbursement			-4,076		-4,076
Sale of own shares	2	52			54
Net income			3,008		3,008
Other changes				-1,440	-1,440
Comprehensive income			3,008	-1,440	1,568
Balance at June 30, 2013	**4,155**	**11,815**	**25,897**	**-988**	**40,879**
Balance at January 1, 2012	**4,150**	**11,689**	**24,830**	**210**	**40,879**
Dividend disbursement			-3,945		-3,945
Sale of own shares	3	74			77
Net income			5,897		5,897
Other changes				621	621
Comprehensive income			5,897	621	6,518
Balance at June 30, 2012	**4,153**	**11,763**	**26,782**	**831**	**43,529**

Notes

Methods

This financial report of SMT Scharf Group as of June 30, 2013 was prepared in accordance with the International Financial Reporting Standards (IFRS), the International Accounting Standards (IAS) and the Interpretations (IFRIC) issued by the International Accounting Standards Board. The accounting policies used and the information included comply with IAS 34 (Interim Financial Reporting). The accounting and valuation policies and the calculation methods applied are the same as those used in the IFRS consolidated financial statements as at December 31, 2012, which were audited by the Group's auditors.

The interim financial statements present a true and fair view of the net assets, financial position and results of operations of SMT Scharf Group for the period under review. They were not subject to an auditor's review.

The interim financial statement is drawn up in euros. Unless otherwise indicated, all amounts are stated and rounded to thousands of euros (EUR thousands).

Consolidated group

The consolidated financial statements of SMT Scharf Group include SMT Scharf AG as well as the following companies:

SMT Scharf GmbH, Hamm
SMT Scharf Polska Sp. z o. o., Tychy, Poland
Global Mining Services GmbH, Hamm
SMT Scharf Africa (Pty.) Ltd., Kya Sands, South Africa
SMT Scharf International OÜ, Tallinn, Estonia
Scharf Mining Machinery (Beijing) Co. Ltd., Beijing, China
OOO SMT Scharf, Novokuznetsk, Russian Federation
Sareco Engineering (Pty.) Ltd., Brakpan, South Africa
Dosco Holdings Ltd., Tuxford, United Kingdom (until May 7, 2013)
Dosco Overseas Engineering Ltd., Tuxford, United Kingdom (until May 7, 2013)
Hollybank Engineering Co. Ltd., Tuxford, United Kingdom (until May 7, 2013)
OOO Dosco, Novokuznetsk, Russian Federation (until May 7, 2013)
SMT Scharf Saar GmbH, Neunkirchen
Shandong Xinsha Monorail Co. Ltd., Xintai, China
TOW SMT Scharf Ukraine, Donetsk, Ukraine
SMT Scharf Far East Holdings Ltd., Hong Kong, China

As 50 % participating interests, Shandong Xinsha Monorail Co. Ltd. is consolidated using the equity method.

On January 11, 2013, SMT Scharf GmbH acquired the remaining 50 % of the shares in TOW SMT Scharf Ukraine for a purchase price of EUR 40 thousand. This company has no longer been accounted for in the consolidated financial statements using the equity method since this date, but has been fully consolidated instead. The total consideration to acquire control consequently also included the equity valuation of EUR 98 thousand that was reported under financial assets until the acquisition date. This company, whose business purpose is to develop the Ukrainian market, contributed EUR 16 thousand to SMT Scharf Group revenue, and EUR 32 thousand to Group EBIT.

The fair values of the acquired assets and liabilities are as follows as of the acquisition date:

	Fair values
Assets	
Other current receivables/assets	7
Cash and cash equivalents	62
Langfristige Vermögenswerte	29
Total	**98**
Equity and liabilities	
Equity	98
Total	**98**

Discontinued operations

Sale of the Roadheader Technology segment

On May 7, 2013, the company concluded a sales agreement for the disposal of the Dosco Holdings Ltd. subsidiary, which, together with its subsidiaries, represented the Roadheader Technology segment. The sales proceeds amounted to EUR 2,000,000.

This disposal is in line with the Managing Board's strategy of concentrating the Group's business activities on its core Captivated Transport Systems business. The sales transaction was concluded on May 7, 2013, when control over the Roadheader Technology segment transferred to the purchaser.

Analysis of results from discontinued operations

The results attributable to the discontinued Roadheader Technology segment, which is included in the annual financial statements, are set out below. The comparable information relating to the results and the cash flows of the discontinued operations were adjusted in order to take into account the segments classified as discontinued in the current year.

	30.06.2013	30.06.2012
Revenue	1,369	13,331
Other income	463	376
Expenses	-3,068	-13,378
Profit/loss before tax	-1,236	330
Attributable income tax expense	203	-88
Loss on the disposal of operations (including TEUR 53 of foreign currency translation differences recycled to the income statement from the foreign currency translation reserve)	-930	0
Net profit/loss for the year from discontinued operations	-1,963	242

Assets and liabilities disposed of due to loss of control:

Current assets	
Cash and cash equivalents	3,085
Trade receivables	1,310
Inventories	3,544
Other current receivables/assets	373
Non-current assets	
Intangible assets	469
Property, plant and equipment	2,538
Deferred tax assets	2,666
Current liabilities	
Current provisions	-490
Trade payables	-1,518
Other current liabilities	-510
Non-current liabilities	
Provisions for pensions	-8,476
Deferred tax liabilities	-114
Net assets sold	2,877

The consideration received amounted to EUR 2,000,000.00, of which EUR 1,500,000.00 was received in the form of cash and cash equivalents.

The disposal loss from the sale of subsidiaries amounts to:	
Consideration received	2,000
Net assets relinquished	-2,877
Cumulative foreign currency translation differences recycled from equity loss of control	-53
Disposal loss	-930

The disposal loss is included in the profit/loss from discontinued operations.

The net cash outflow from the disposal of subsidiaries amounts to:

Disposal price settled in cash and cash equivalents	1,500
less: cash and cash equivalents relinquished with the disposal	-3,085
Net cash outflow	-1,585

The cash flows from discontinued operations that are included in the cash flow statement are as follows:

Net cash flow from operating activities	-217	-3,169
Net cash flow from investing activities	-21	-102
Net cash flow from financing activities	0	0
Total net cash flows	-238	-3,271

Notes to the income statement

(1) Revenue

Revenue is composed of the following items:

	01.04.2013-30.06.2013	01.04.2012-30.06.2012	01.01.2013-30.06.2013	01.01.2012-30.06.2012
New equipment	7,829	11,249	14,813	20,981
Spare parts/service/other	9,014	8,092	17,135	15,279
Total	**16,843**	**19,341**	**31,948**	**36,260**
Germany	1,449	1,796	3,359	4,019
Other countries	15,394	17,545	28,589	32,241
Total	**16,843**	**19,341**	**31,948**	**36,260**

(2) Income taxes

Income taxes are composed of the following items:

	01.04.2013-30.06.2013	01.04.2012-30.06.2012	01.01.2013-30.06.2013	01.01.2012-30.06.2012
Current tax expense	714	1,233	1,617	1,903
Deferred taxes	224	-11	-7	-216
Total	**938**	**1,222**	**1,610**	**1,687**

(3) Segment reporting

SMT Scharf Group now operates exclusively in the captivated transport systems segment following the disposal on May 7, 2013, of the Dosco Group, which had previously formed the roadheader technology segment. The products and services offered in this segment are similar in terms of production and sales processes, and in terms of type of customer. As the main decision-maker in terms of decisions concerning the distribution of resources, the Managing Board has analysed and assessed the profitability of the activities of SMT Scharf Group, as well as exclusively at the overall Group level. Following the sale of the Dosco Group, all SMT Scharf Group business activities considered together consequently form one operating segment in the meaning of IFRS 8.

Notes to the balance sheet

(4) Current assets

Securities and cash and cash equivalents as of June 30, 2013 include a hardship and social fund amounting to EUR 681 thousand. This fund is managed in trust by a commission consisting of the management of SMT Scharf GmbH and SMT Scharf Saar GmbH as well as these two companies' works councils.

(5) Non-current assets

SMT Scharf Group leases internally developed monorail hanging railways as a lessor. These are recorded as leased assets under property, plant and equipment. There were six leased items as of June 30, 2013.

From January to June 2013, EUR 320 thousand were capitalized as development expenses for projects that fulfil the requirements of IAS 38.

(6) Liabilities

The mezzanine financing taken out in 2006 is reported as a current financial liability as of the balance sheet date. This runs until April 2013 and has been returned as scheduled. There are no liabilities secured by liens.

(7) Equity

The changes in SMT Scharf Group's equity are shown in the statement of changes in equity. In order to enhance transparency, the retained earnings and the profit brought forward were compounded to form a single item.

On June 30, 2013, 4,200,000 ordinary bearer shares of SMT Scharf AG were issued in the form of no-par value shares with a notional interest of EUR 1 each. Of this total, SMT Scharf AG held 45,150 treasury shares. No stock options have been granted to members of the Supervisory or Managing Boards or employees of the company. A total of 2,125 shares were sold to employees in 2013 as part of an employee equity participation plan. These were transferred end of March.

In April 2013, the Ordinary General Meeting passed a resolution to distribute a dividend of EUR 0.98 per share for the 2012 fiscal year.

Other disclosures

(8) Contingent liabilities and other financial commitments

The company has no significant contingent liabilities that are unusual in the industry.

There are other financial liabilities in particular from rental and lease agreements for buildings, cars and photocopiers. The agreements have maturities of up to five years and in some cases include extension options and escalation clauses. In the period under review, payments amounting to EUR 302 thousand were recognised under other operating expenses. The nominal amount of the future minimum lease payments (core business) from rental agreements and operating leases that cannot be terminated is as follows (by due date):

	30.06.2013	**30.06.2012**	**31.12.2012**
Due within one year	238	200	161
Due in one to five years	420	381	578

(9) Supervisory and Managing Boards

During the period under review, the members of SMT Scharf AG's Supervisory Board were:
Dr. Dirk Markus, Feldafing, CEO of Aurelius AG, (Chairman),
Dr. Rolf-Dieter Kempis, Waldenburg, management consultant (Deputy Chairman),
Dr. Harald Fett, Monheim, management consultant (from April 25, 2012).

The members of the Managing Board of SMT Scharf AG in the reporting period were:
Christian Dreyer (CEO),
Heinrich Schulze-Buxloh.

As of June 30, 2013, Christian Dreyer did not hold any shares of the company, and Mr. Schulze-Buxloh held 6,000 shares. The members of the Supervisory Board held 1,000 shares.

(10) Related party disclosures

Services with a value of EUR 25 thousand were procured on normal market terms from related parties as defined by IAS 24. No services were provided to related parties.

(11) Financial instruments and financial risks

SMT Scharf Group enters into derivative transactions in the form of currency forwards in particular to hedge currency risks. The Group does not trade in financial instruments, in accordance with its financial policy objectives. No fair value hedges were utilised in the period under review.

Please see the 2012 group financial report for information on the financial risks of SMT Scharf Group's business. No substantial changes occurred over and above this from January to June 2013.

Responsibility Statement

To the best of our knowledge, and in accordance with the applicable reporting principles, SMT Scharf AG‘s consolidated interim financial statements as of June 30, 2013, provide a true and fair view of the group‘s assets, liabilities, financial position and results of operations, and the Group interim management report for first half 2013 presents the group‘s business including its results and the group‘s position such as to provide a true and fair view and describes the major opportunities and risks of the group‘s anticipated growth.

Hamm, August 14, 2013

The Management Board

Christian Dreyer Heinrich Schulze-Buxloh

Imprint

SMT Scharf AG
Römerstr. 104
59075 Hamm

Tel: +49 (0) 2381 – 960-212
Fax: +49 (0) 2381 – 960-311

e-mail: ir@smtscharf.com

www.smtscharf.com

Investor Relations contact

cometis AG
Patrick Ortner
Unter den Eichen 7
65195 Wiesbaden

Tel: +49 (0) 611 – 205855-16
Fax: +49 (0) 611 – 205855-66

e-mail: ortner@cometis.de

www.cometis.de